ỦY BAN NHÂN DÂN THÀNH PHỐ HỒ CHÍ MINH

TRƯỜNG CAO ĐẲNG KINH TẾ KỸ THUẬT

THÀNH PHỐ HỒ CHÍ MINH

ISO 9001 - 2008

GIÁO TRÌNH

MÔN HỌC

TIẾNG ANH CHUYÊN NGÀNH Ô TÔ

TRÌNH ĐỘ: CAO ĐẲNG

(Ban hành kèm theo Quyết định số: /QĐ-CĐKTKT ngày tháng năm 20 của Hiệu trưởng Trường Cao đẳng Kinh tế - Kỹ thuật Thành phố Hồ Chí Minh)

Thành phố Hồ Chí Minh, năm 2017

ỦY BAN NHÂN DÂN THÀNH PHỐ HỒ CHÍ MINH
TRƯỜNG CAO ĐẲNG KINH TẾ KỸ THUẬT
THÀNH PHỐ HỒ CHÍ MINH

GIÁO TRÌNH
MÔN HỌC
TIẾNG ANH CHUYÊN NGÀNH Ô TÔ

TRÌNH ĐỘ: CAO ĐẲNG

THÔNG TIN CHỦ NHIỆM ĐỀ TÀI

Họ tên: Phạm Thị Thu Thảo

Học vị: Thạc sỹ

Email: phamthithuthao@hotec.edu.vn

THÀNH VIÊN THAM GIA:

Họ tên: Trần Hồng Tính

Học vị: Kỹ sư

Email: tranhongtinh@hotec.edu.vn

Đơn vị: Khoa Công Nghệ Ô tô

TRƯỞNG KHOA	TỔ TRƯỞNG BỘ MÔN	CHỦ NHIỆM ĐỀ TÀI

HIỆU TRƯỞNG
DUYỆT

Thành phố Hồ Chí Minh, năm 2017

NOTE ON PRODUCT NAMES

PREFACE

We are truly living in a "world of wheels." Every day, millions of people depend on their cars, trucks, vans, and sport-utility vehicles as their primary means of transportation. As a result, economic experts predict a strong demand for skilled automobile engineers and related professionals for the foreseeable future. You have chosen to study an area of employment that pays well and will require thousands of new graduates yearly.

English for the Automobile Industry has been developed specifically for people who work in the automobile industry and who need English to communicate in a variety of situations with colleagues, clients, and business partners. It supplies you with the target vocabulary and commonly-used expressions that are essential to communication, whether you work directly for a car manufacturer, a supplier, in a car dealership, or for a marketing agency involved with the automobile industry

This book will introduce you to the "basics" of automotive technology. It contains common terms related to automobile construction and operation.

It is hopefully expected that you will find this book useful and interesting and to some extent facilitate their learning process.

As in any textbook, there are a number of aspects that cannot be covered due to space limitations and time restraint. We especially welcome good comments or any ideas for improvement.

Dated on ……, 20….

Author: Phạm Thị Thu Thảo

Co-author: Trần Hồng Tính

CONTENTS

INTRODUCTION TO THE SUBJECT

CHƯƠNG TRÌNH MÔN HỌC

Tên môn học: TIẾNG ANH CHUYÊN NGÀNH Ô TÔ

Mã môn học: 3107110

Thời gian thực hiện môn học: 45 giờ (Lý thuyết: 15 giờ; Thực hành, thí nghiệm, thảo luận, bài tập: 28 giờ; Kiểm tra: 2 giờ)

I. Vị trí, tính chất của môn học:

- Vị trí: Học phần tiếng Anh chuyên ngành ô tô được giảng dạy ở học kỳ III của chương trình đào tạo ngành công nghệ ô tô bậc cao đẳng.

- Tính chất: học phần chuyên ngành bắt buộc đối với học viên.

II. Mục tiêu môn học:

- Về kiến thức:

  + Đọc và trình bày được nội dung của tài liệu chuyên ngành bằng tiếng Anh;

  + Trình bày được tên gọi bằng tiếng Anh của các chi tiết trên các hệ thống của ô tô;

  + Miêu tả được chi tiết trên ô tô bằng tiếng Anh.

- Về kỹ năng:

  + Truy cập internet tìm kiếm tài liệu chuyên ngành bằng tiếng Anh;

  + Tìm kiếm được tên tiếng Anh của các phụ tùng ô tô.

- Về năng lực tự chủ và trách nhiệm:

  + Phân tích được tầm quan trọng của học phần tiếng Anh chuyên ngành trong chương trình đào tạo chuyên ngành công nghệ ô tô và trong thực tế việc làm sau khi tốt nghiệp;

  + Có thái độ học tập nghiêm túc, tham gia thảo luận và làm việc nhóm.

UNIT 1- INTERNAL COMBUSTION ENGINE

Objectives:

After studying this unit, you should be able to recognize the structure and operation principle of internal combustion engine.

Introduction:

Unit 1 supplies students with knowledge of the structure and operation principle of gasoline four strokes engine, gasoline two strokes engine, diesel four strokes engine, and diesel two strokes engine.

Main content:

1.1 Gasoline four strokes engine

1.1.1 Structure

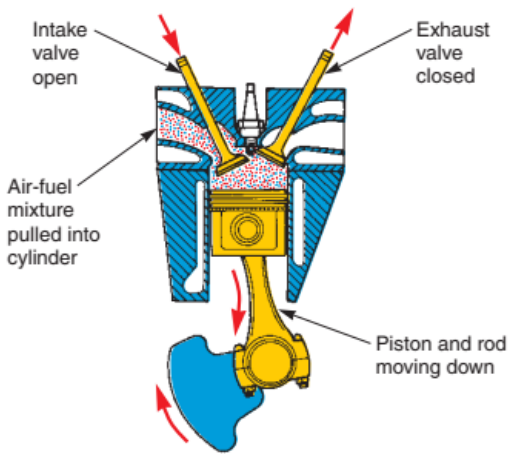

1—Intake stroke. Intake valve open. Exhaust valve closed. Piston slides down, forming vacuum in cylinder. Atmospheric pressure pushes air and fuel into combustion chamber.

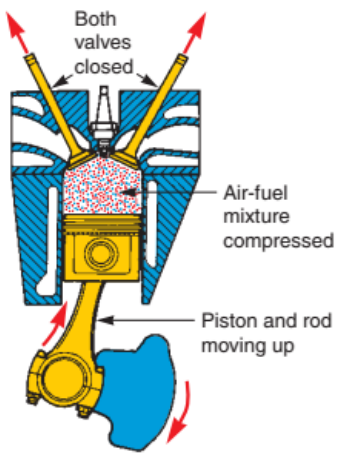

2—Compression stroke. Both valves are closed. Piston slides up and pressurizes air-fuel mixture. This readies mixture for combustion.

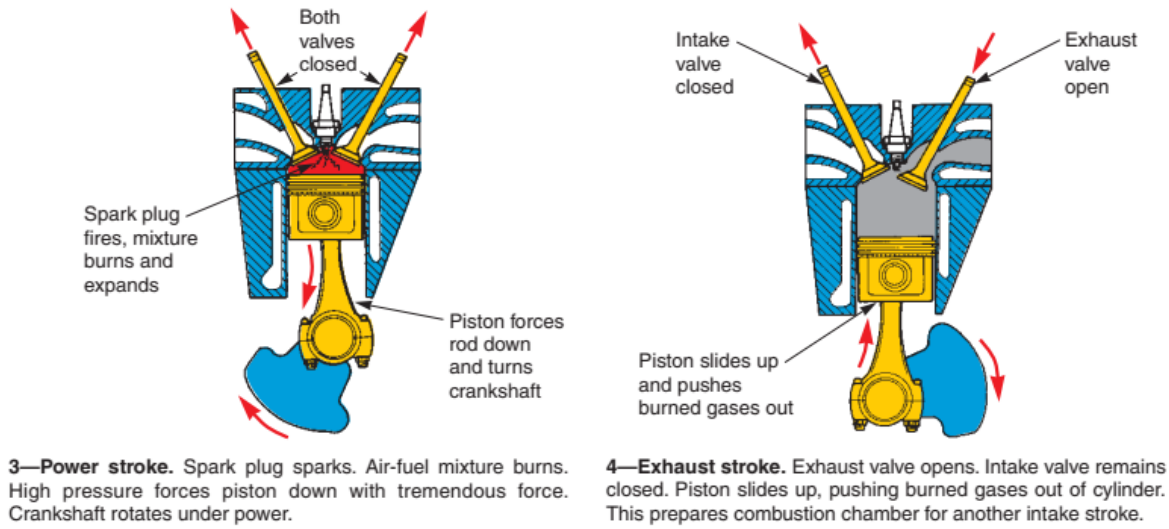

Figure 1.1- Gasoline four strokes engine

(adapted from *Modern Automotive Technology* -7th Edition, by James E. Duffy, The Goodheart-Willcox Co., Inc. 2009)

1.1.2 Operation principle

Automobile engines normally use a four-stroke cycle. Four separate piston strokes (up or down movements) are needed to produce one cycle (complete series of events). The piston must slide down, up, down, and up again to complete one cycle.

As the four strokes are described below, study the simple drawings in Figure 1-1.

1. The intake stroke draws the air-fuel mixture into the engine's combustion chamber. The piston slides down while the intake valve is open and the exhaust valve is closed. This produces a vacuum (low-pressure area) in the cylinder. Atmospheric pressure (outside air pressure) can then force air and fuel into the combustion chamber.

2. The compression stroke prepares the air-fuel mixture for combustion. With both valves closed, the piston slides upward and compresses (squeezes) the trapped air-fuel mixture.

3. The power stroke produces the energy to operate the engine. With both valves still closed, the spark plug arcs (sparks) and ignites the compressed air-fuel mixture. The burning fuel expands and develops pressure in the combustion chamber and on the top of the piston. This pushes the piston down with enough force to keep the crankshaft spinning until the next power stroke.

4. The exhaust stroke removes the burned gases from the combustion chamber. During this stroke, the piston slides up while the exhaust valve is open and the intake valve

is closed. The burned fuel mixture is pushed out of the engine and into the exhaust system.

During engine operation, these four strokes are repeated over and over. With the help of the heavy flywheel, this action produces smooth, rotating power output at the engine crankshaft.

Obviously, other devices are needed to lubricate the engine parts, operate the spark plug, cool the engine, and provide the correct fuel mixture. These devices will be discussed shortly.

1.2 Gasoline two strokes engine

1.2.1 Structure

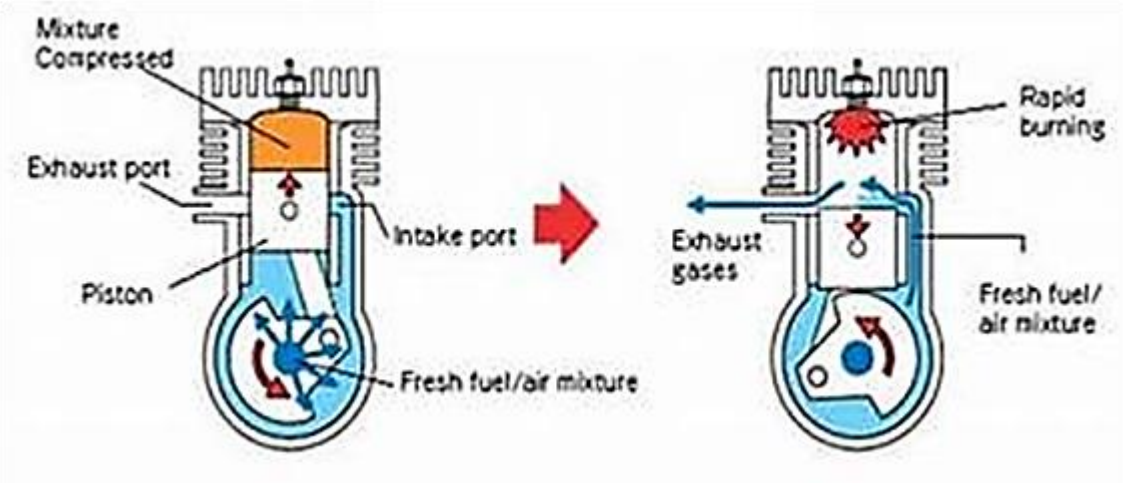

Figure 1.2- Gasoline four strokes engine

(adapted from *Modern Automotive Technology* -7th Edition, by James E. Duffy, The Goodheart-Willcox Co., Inc. 2009)

1.2.2 Operation principles

A two stroke engine is a type of internal combustion engine which completes a power cycle with two strokes of the piston during only one crankshaft revolution.

In four stroke engines, there is one working stroke in two revolutions of the crankshaft or in a cycle of four strokes of the piston. The desire of one working stroke in every revolution of the crankshaft has led to the development of two stroke engine.

In 1838, Barnett, an Englishman, described the mechanism for supplying a charge to the cylinder by means of separate pumps. In 1878, Dugald Clerk also made a lot of contribution in this direction and described a two stroke cycle known as Clerk Cycle.

The two-stroke engine employs for small powers required in autocycles, scooters, motorcycles. In two-stroke engines, there is no suction and exhaust strokes. There are only two remaining strokes the compression stroke and power stroke. These are usually called the upward stroke and downward stroke. Also, instead of valves, there are inlet and exhaust ports in two-stroke engines.

Fresh charge enters the cylinder at the end of the working stroke through the inlet port. And then burnt exhaust gases are forced out through the exhaust port by a fresh charge.

1. Upward Stroke

   During upward stroke, the piston moves upward from the bottom dead centre to top dead centre. By compressing the charge air petrol mixture in the combustion chamber of the cylinder. Due to upward movement of the piston, a partial vacuum is created in the crankcase.

   And a new charge is drawn into the crankcase through the uncovered inlet port. The exhaust port and transfer port are covered when the piston is at the top dead centre position. The compressed charge is ignited in the combustion chamber by a spark given by the spark plug.

2. Downward Stroke

   As soon as the charge is ignited the hot gases compress the piston which moves downward, rotating the crankshaft thus doing the useful work. During this stroke, the inlet port is covered by the piston and the new charge is compressed in the crankcase. Further downward movement of the piston uncovers first the exhaust port and then the transfer port. and hence the exhaust starts through the exhaust port.

   As soon as transfer port is open, the charge through it is forced into the cylinder. The charge strikes the deflector on the piston crown, rises to the top of the cylinder and pushes out most of the exhaust gases. The piston is now at the bottom dead centre position.

   The cylinder is completely filled with a fresh charge, although it is somewhat with the exhaust gases. The cycle of events is then repeated, the piston making two strokes for each revolution of the crankshaft.

1.3 Diesel four strokes engine

1.3.1 Structure

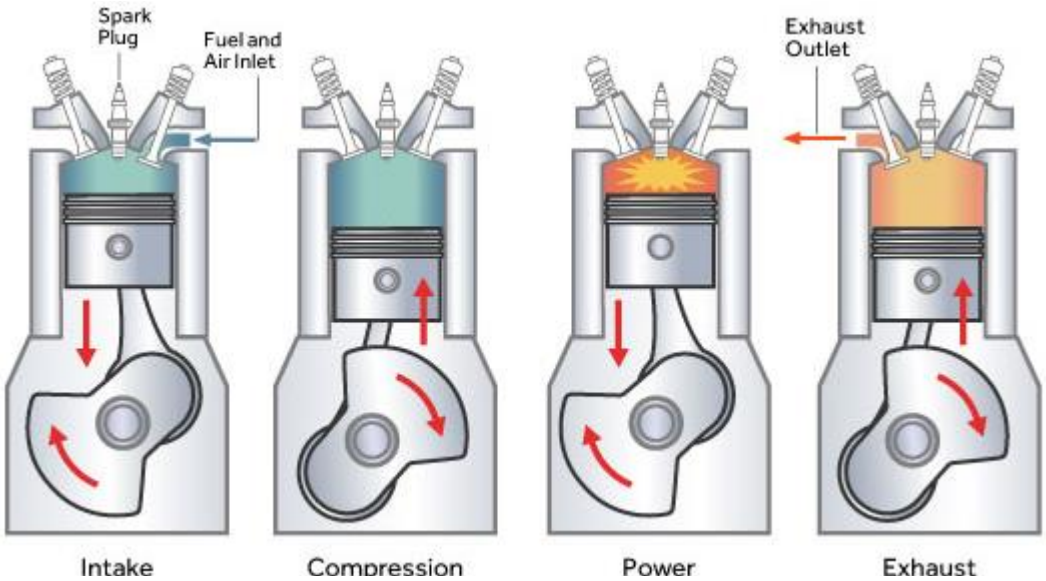

Figure 1.3- Diesel four strokes engine
(adapted from *Diesel engine* by Charles Lafayette Proctor, www.britannica.com/technology/diesel-engine/Fuel-injection-technology)

1.3.2 Operation principles

Basically, there are two types of diesel engine types - the Four Stroke and Two Stroke. The 'Diesel Cycle' uses higher Compression-Ratio. It was named after German engineer Rudolph Diesel, who invented and developed first Four-Stroke diesel engine. The four strokes of the diesel cycle are similar to that of a petrol engine. However, the 'Diesel Cycle' considerably defers by the way the fuel system supplies the diesel the engine and ignites it.

A conventional internal combustion diesel engine works on 'Diesel Cycle'. In the simple diesel engines, an injector injects diesel into the combustion chamber above the piston directly. The 'Compression-Ignition engine' is also another name for the Diesel engine. This is mainly because it burns the diesel with hot and compressed air. The temperature of the air inside the combustion chamber rises to above 400°c to 800°c. This, in turn, ignites the diesel injected into the combustion chamber. Thus, the 'Diesel Cycle' does not use an external mechanism such as a spark-plug to ignite the air-fuel mixture.

The Four-Stroke diesel engine works on the following cycle:

1. Suction Stroke – With pistons moving downwards and the opening of the inlet valve creates the suction of clean air into the cylinders.
2. Compression – With the closing of Inlet valve the area above the piston gets closed.

The piston moves up resulting in compression of the air in a confined space under higher compression-ratio.

Combustion Process – At this stage, the injector sprays the diesel into the combustion chamber. The rise in temperature of the air caused by its compression; results in instantaneous burning of diesel with an explosion. This causes heat to release which generates expanding forces known as power.

3. Power Stroke – Furthermore, these forces again push the pistons downwards resulting in their reciprocating motion.
4. Exhaust Stroke – On their way up, the pistons push the exhaust gases above them through the exhaust valve which opens during the exhaust stroke.

This cycle repeats itself until the engine turns off, resulting in the continuance of engine's running.

A diesel engine is mainly classified into two types - Indirect-Injection (IDI) & Direct-injection (DI). The Direct-Injection diesel cycle was an earlier generation technology. It later evolved into its successor & more advanced CRDi. Earlier generation utility vehicles, trucks, buses & generators still widely use the simple DI engines. Furthermore, sophisticated & refined CRDi engines became very popular in the Sedans, MPVs, SUVs and Luxury cars in the recent past.

1.4 Diesel two strokes engine

1.4.1 Structure

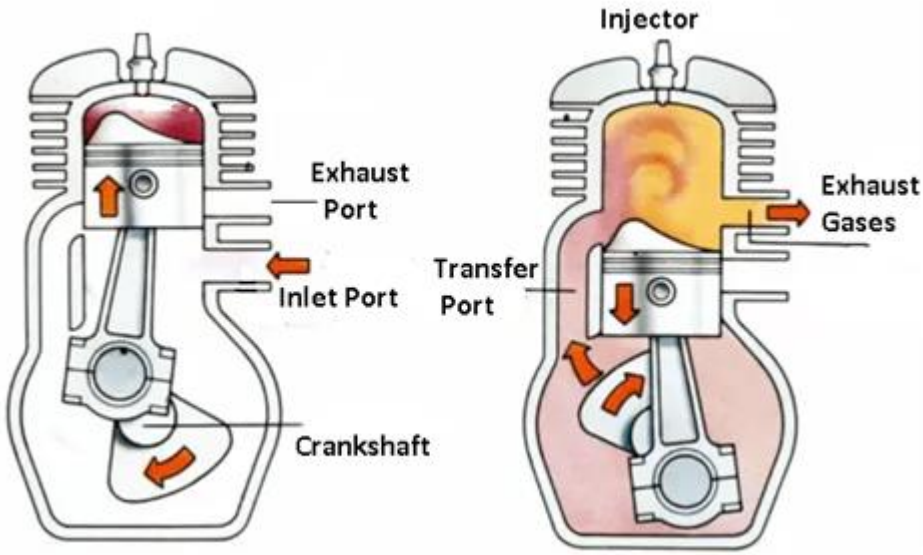

Figure 1.4- Diesel two strokes engine
(adapted from *Two-Stroke Engine: Parts, Types, Working Principle with Diagram [Petrol and Diesel Engines]*, by Saif M, www.theengineerspost.com/two-stroke-cycle-engine/ 2020)

1.4.2 Operation principles

In this two stroke engine, only air is compressed inside the cylinder. and the fuel (diesel) is injected by an injector fitted in the head of the cylinder. There is no spark plug in this engine. The remaining operations of the two stroke compression ignition engine are exactly the same. as those of the spark ignition engine.

1.5 Exercise

1. Name parts of gasoline four strokes engine, gasoline two strokes engine, diesel four strokes engine, and diesel two strokes engine.

2. What is the stroke below? Can you identify the following parts? Write the correct letter and words next to each number.

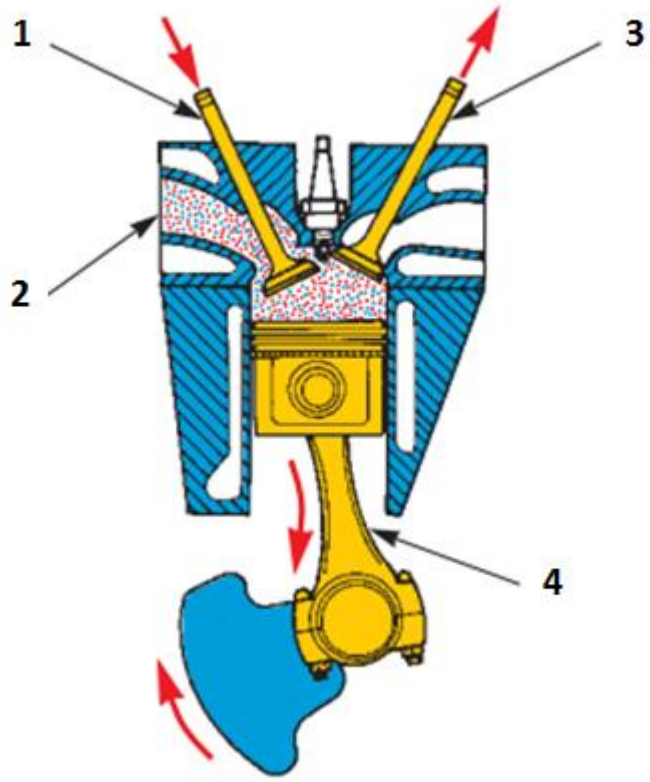

(adapted from *Modern Automotive Technology* -7th Edition, by James E. Duffy, The Goodheart-Willcox Co., Inc. 2009)

A. Exhaust valve closed

B. Air-fuel mixture pulled into cylinder

C. Piston and rod moving down

D. Intake valve open

UNIT 2- ELECTRICAL SYSTEMS

Objectives:

After studying this unit, you should be able to recognize the structure and function of electrical systems.

Introduction:

Unit 2 supplies students with knowledge of the structure and function of Starting system, Charging system, Ignition system, Lighting system, and Horn system.

Main content:

2.1 Starting system

2.1.1 Structure and function

The starting system has a powerful electric starting motor that rotates the engine crankshaft until the engine 'fires' and runs on its own power. The major parts of the starting system are shown in Figure 2.1.

2.1.2 Wiring Diagram

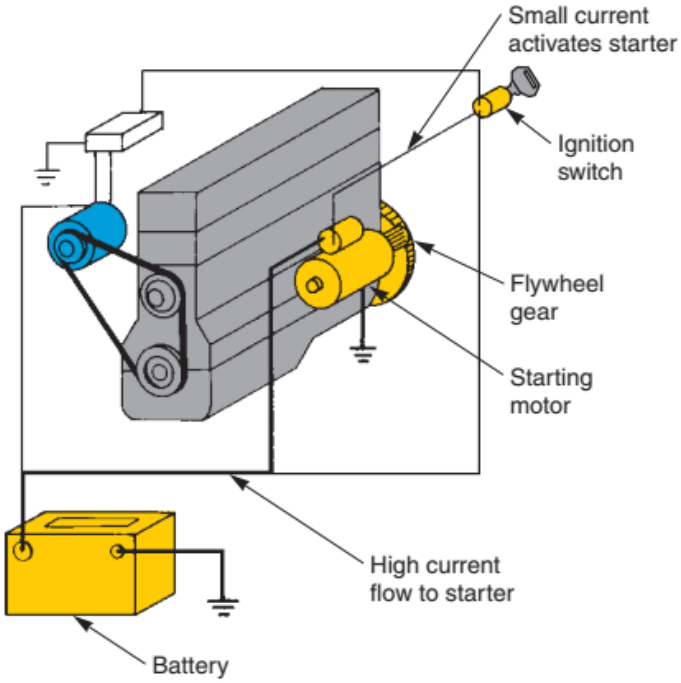

Figure 2.1- Starting system
(adapted from Modern Automotive Technology -7th Edition, by James E. Duffy, The Goodheart-Willcox Co., Inc. 2009)

2.1.3 Operation principle of staring system

A battery provides the electricity for the starting system. When the key is turned to the start position, current flows through the starting system circuit. The starting motor is energized, and the starting motor pinion gear engages a gear on the engine flywheel. This spins the crankshaft. As soon as the engine starts, the driver must shut off the starting system by releasing the ignition key.

2.2 Charging system

2.2.1 Structure and function

The charging system is needed to replace electrical energy drawn from the battery during starting system operation. To re-energize the battery, the charging system forces electric current back into the battery. The fundamental parts of the charging system are shown in Figure 2.2.

2.2.2 Wiring Diagram

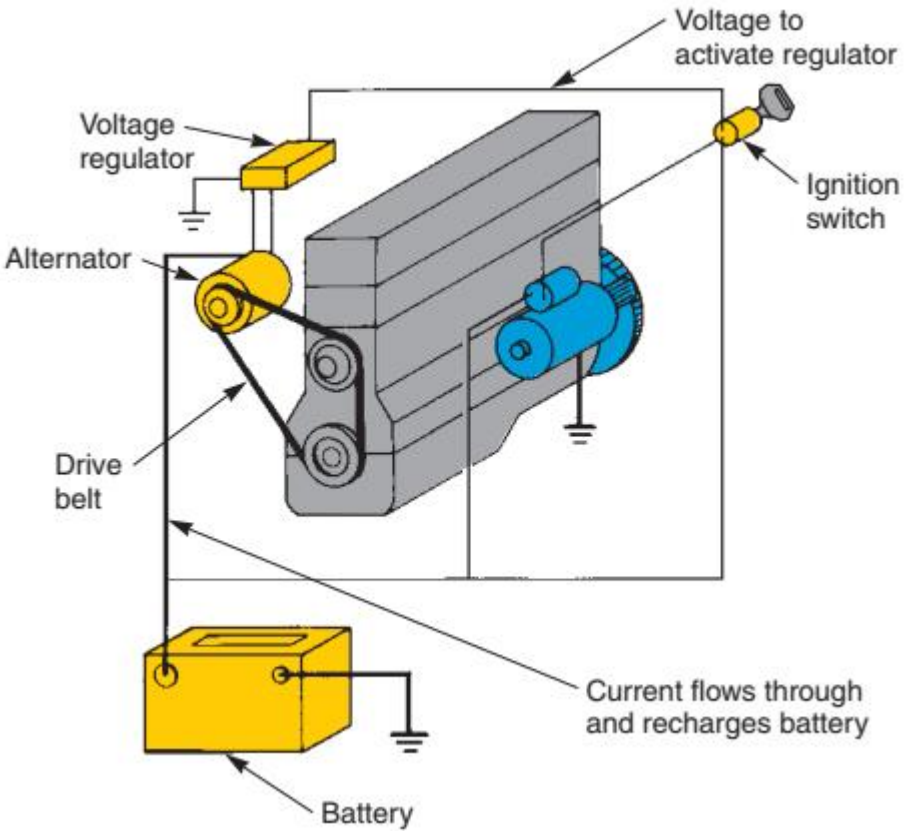

Figure 2.2- Charging system
(adapted from Modern Automotive Technology -7th Edition, by James E. Duffy, The Goodheart-Willcox Co., Inc. 2009)

2.2.3 Operation principle of charging system

When the engine is running, a drive belt spins the alternator pulley. The alternator (generator) can then produce electricity to recharge the battery and operate other electrical needs of the vehicle. A voltage regulator, usually built into the alternator, controls the voltage and current output of the alternator.

2.3 Ignition system

2.3.1 Structure and function

An ignition system is needed on gasoline engines to ignite the air-fuel mixture. It produces an extremely high voltage surge, which operates the spark plugs. A very hot electric arc jumps across the tip of each spark plug at the correct time. This causes the air-fuel mixture to burn, expand, and produce power. Study Figure 2.3.

2.3.2 Wiring Diagram

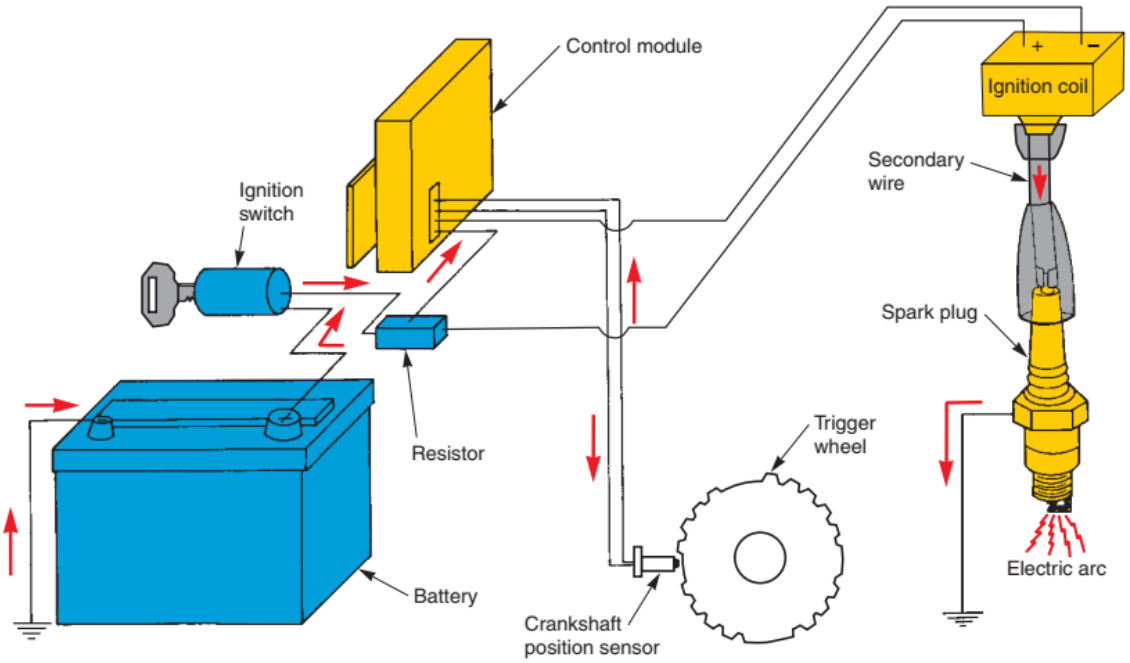

Figure 2.3- Ignition system
(adapted from *Modern Automotive Technology* -7th Edition, by James E. Duffy, The Goodheart-Willcox Co., Inc. 2009)

2.3.3 Operation principle of staring system

With the ignition switch on and the engine running, the system uses sensors to monitor engine speed and other operating variables. Sensor signals are fed to the control module. The control module then modifies and amplifies (increases) these signals into on-off current pulses that trigger the ignition coil. When triggered, the ignition coil produces a high voltage output to 'fire' the spark plugs. When the ignition key is turned off, the coil stops functioning and the spark-ignition engine stops running.

2.4 Lighting system

2.4.1 Structure and function

The lighting system consists of the components that operate a vehicle's interior and exterior lights (fuses, wires, switches, relays, etc.).

2.4.2 Wiring Diagram

The exact circuit and part configurations will vary from one model to another.

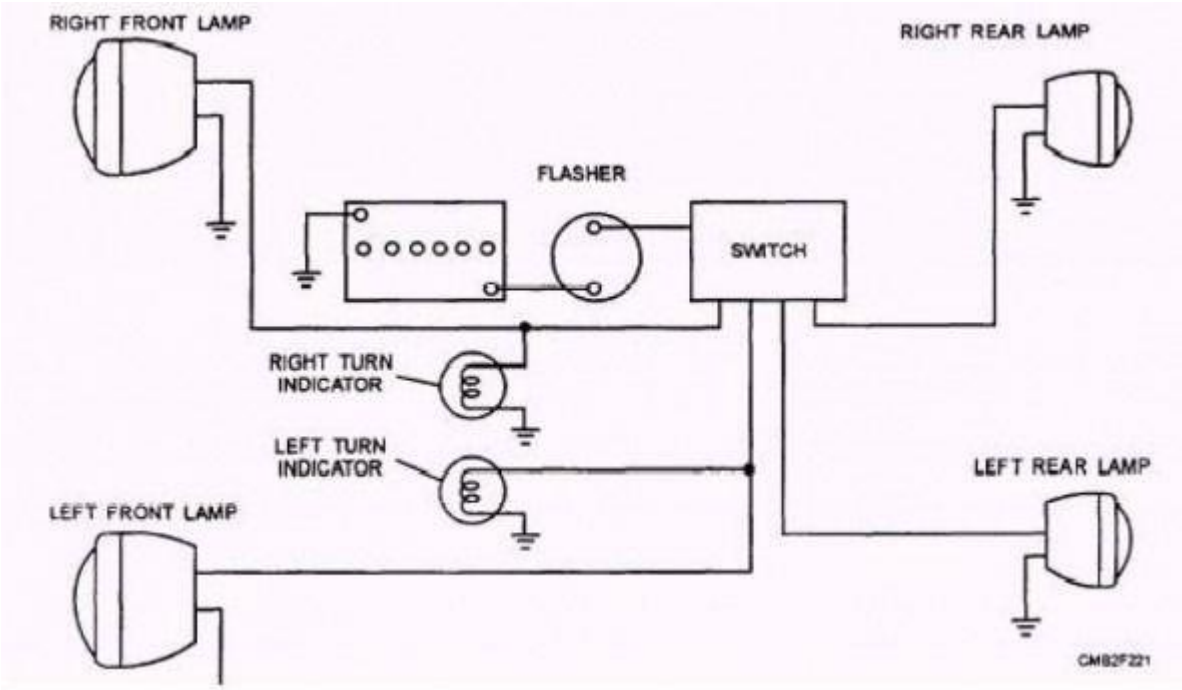

Figure 2.4- Lightning system
(www.pinterest.com)

2.4.3 Operation principle of Lightning system

The exterior lights typically include the headlights, turn signals, brake lights, parking lights, backup lights, and side marker lights. The interior lights include the dome light, trunk light, instrument panel lights, and other courtesy lights.

2.5 Horn system

2.5.1 Structure and function

Car horns are usually electric, driven by a flat circular steel diaphragm that has an electromagnet acting on it in one direction and a spring pulling in the opposite direction. The diaphragm is attached to contact points that repeatedly interrupt the current to that electromagnet causing the diaphragm to spring back the other way, which completes the circuit again.

2.5.2 Wiring Diagram

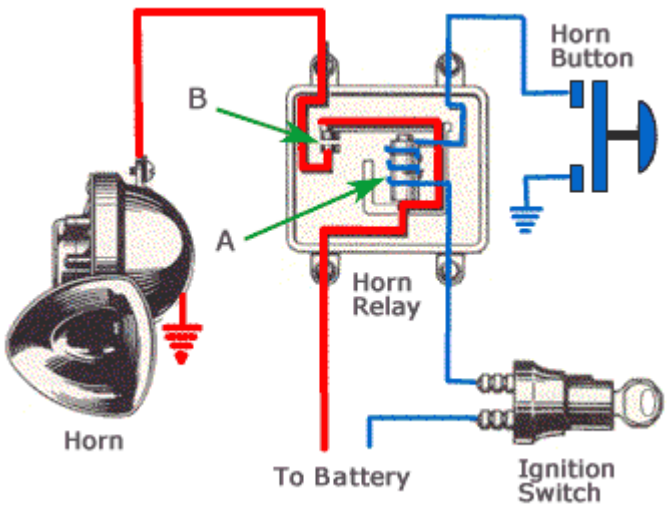

Figure 2.5- Horn system
(images.app.goo.gl/hydfdqgZCLbouPay9)

2.5.3 Operation principle of horn system

Cars are usually fitted with a high-frequency (HF) or windtone horn as standard equipment, normally located behind the front grille. A vibrating diaphragm makes the sound in both types.

The diaphragm is moved by an electromagnet and contact breaker, like that of an electric bell.

In an HF horn, a resonator plate is fixed to the diaphragm to amplify the sound.

In a windtone, the diaphragm makes air vibrate in a trumpet, giving a lower pitched and more musical sound. The length of the trumpet fixes the pitch.

In some cars there is a pair of wind-tones, tuned to give two notes. They .are marked for low notes and 'H' for high.

A third type of horn, the air horn, uses a compressor, and is fitted only as an accessory. It has a loud and distinctive note and is sold with fitting instructions.

Note that an audible warning device is a legal requirement for all vehicles, and strident horns sounding fluctuating notes are allowed on emergency-service vehicles and police cars only.

2.6 Exercise

1. The car's electrical system consists of the:

   (A) ignition, starting, lubrication, and lighting systems.

   (B) ignition, charging, lighting, and hydraulic systems.

   (C) lighting, charging, starting, and ignition systems.

   (D) None of the above.

2. Name main parts of Starting system, Charging system, Ignition system, Lighting system, and Horn system.

UNIT 3- FUEL SYSTEM

Objectives:

After studying this unit, you should be able to recognize the structure and function of fuel system.

Introduction:

Unit 3 supplies students with knowledge of the structure and function of Gasoline fuel System and Diesel fuel system.

Main content:

What is Fuel system?

Fuel system provides a combustible air-fuel mixture to power the engine.

The fuel system must provide the correct mixture of air and fuel for efficient combustion (burning). This system must add the right amount of fuel to the air entering the cylinders. This ensures that a very volatile (burnable) mixture enters the combustion chambers.

The fuel system must also alter the air-fuel ratio (percentage of air and fuel) with changes in operating conditions (engine temperature, speed, load, and other variables).

There are three basic types of automotive fuel systems: gasoline injection systems, diesel injection systems, and carburetor systems.

3.1 Gasoline fuel system

3.1.1 Structure and function

Modern gasoline injection systems use a control module, sensors, and electrically operated fuel injectors (fuel valves) to meter fuel into the engine. This is the most common type of fuel system on gasoline, or spark ignition, engines. See Figure 3.1.

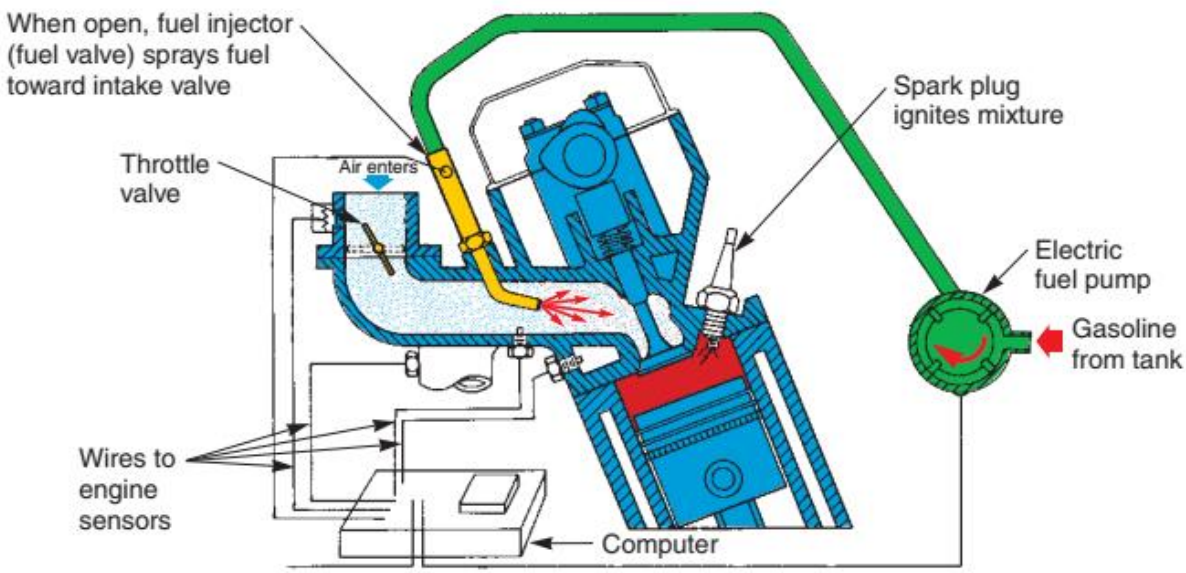

Figure 3.1- Gasoline fuel system
(adapted from *Modern Automotive Technology* -7th Edition, by James E. Duffy, The Goodheart-Willcox Co., Inc. 2009)

3.1.2 Operation principle of gasoline fuel system

An electric fuel pump forces fuel from the fuel tank to the engine. The control module, reacting to electrical data it receives from the sensors, opens the injectors for the correct amount of time. Fuel sprays from the open injectors, mixing with the air entering the combustion chambers.

A throttle valve controls airflow, engine speed, and engine power. When the throttle valve is open for more engine power output, the computer holds the injectors open longer, allowing more fuel to spray out. When the throttle valve is closed, the computer opens the injectors for only a short period of time, reducing power output.

The throttle valve (air valve) is connected to the accelerator pedal. When the pedal is pressed, the throttle valve opens to increase engine power output.

3.2 Diesel fuel system

3.2.1 Structure and function

A diesel fuel system is primarily a mechanical system that forces diesel fuel (not gasoline) directly into the combustion chambers. Unlike the gasoline engine, the diesel engine does not use spark plugs to ignite the air-fuel mixture. Instead, it uses the extremely high pressure produced during the compression stroke to heat the air in the combustion chamber. The air is squeezed until it is hot enough to ignite the fuel. Refer to Figure 3.2.

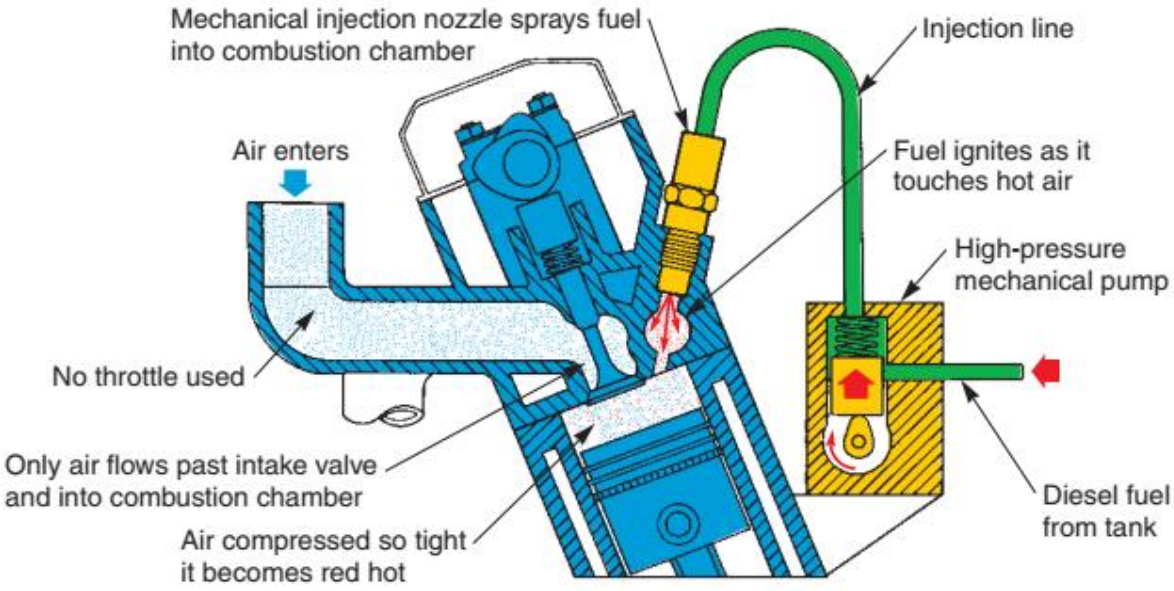

Figure 3.2- Diesel fuel system
(adapted from *Modern Automotive Technology* -7th Edition, by James E. Duffy, The Goodheart-Willcox Co., Inc. 2009)

3.2.2 Operation principle of diesel fuel system

When the mechanical pump sprays the diesel fuel into a combustion chamber, the hot air in the chamber causes the fuel to begin to burn. The burning fuel expands and forces the piston down on the power stroke. Electronic devices are commonly used to monitor and help control the operation of today's diesel injection systems.

3.3 Exercise

1. Each of the following is a basic type of automotive fuel system except:

   (A) carburetor.

   (B) auto injection.

   (C) diesel injection.

   (D) gasoline injection.

2. Describe the two common types of fuel systems.

UNIT 4- COOLING SYSTEM

Objectives:

After studying this unit, you should be able to recognize the structure and function of cooling system.

Introduction:

Unit 4 supplies students with knowledge of the structure and function of Cooling system.

Main content:

4.1 Structure and function

The cooling system maintains a constant engine operating temperature. It removes excess combustion heat to prevent engine damage and also speeds engine warm-up. Look at Figure 4.1.

4.2 Operation principle of cooling system

The water pump forces coolant (water and antifreeze solution) through the inside of the engine, hoses, and radiator. The coolant collects heat from the hot engine parts and carries it back to the radiator.

The radiator allows the coolant heat to transfer into the outside air. An engine fan draws cool air through the radiator. The thermostat controls coolant flow and engine temperature. It is usually located where the top radiator hose connects to the engine.

4.3 What is coolant?

Coolant or antifreeze is one of the most important fluids in a car.

Basically, coolant or antifreeze, which mixes with water in an engine's cooling system is designed to both lower the freezing point and raise the boiling point of the system. This means, by adding coolant/antifreeze to your car's cooling system you're able to increase the temperature a vehicle can run at before the cooling system will boil.

Coolant or antifreeze is an alcohol-based additive that's usually green in colour (although it can also be red, blue, and orange) and made up of Ethylene Glycol.

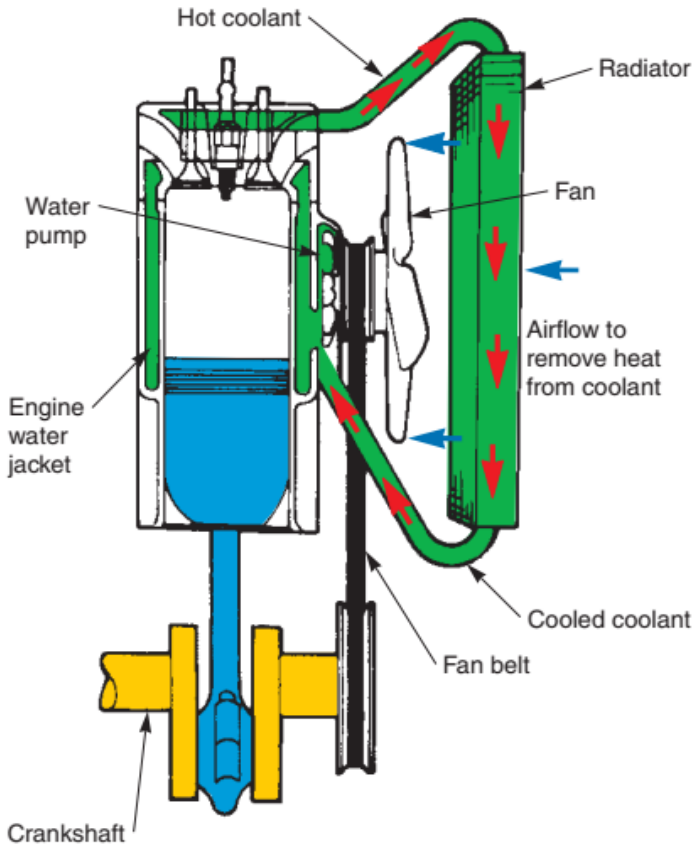

Figure 4.1- Cooling system
(adapted from *Modern Automotive Technology* -7th Edition, by James E. Duffy, The Goodheart-Willcox Co., Inc. 2009)

4.4 Exercise

1. What system reduces the amount of toxic substances released by the vehicle?

2. Describe the operation principle of cooling system.

UNIT 5- LUBRICATION SYSTEM

Objectives:

After studying this unit, you should be able to recognize the structure and function of lubrication system.

Introduction:

Unit 5 supplies students with knowledge of the structure and function of Lubrication system.

Main content:

5.1 Structure and function

The lubrication system reduces friction and wear between internal engine parts by circulating filtered engine oil to high-friction points in the engine. The lubrication system also helps cool the engine by carrying heat away from internal engine parts, Figure 5.1.

5.2 Operation principle of cooling system

The oil starts in the oil pan where it is drawn up through the pickup screen and tube, and forced through the oil pump. The pressure relief valve bleeds off any excess oil pressure and re-routes it back to the oil pan. The pump directs the oil to the oil filter where it is cleaned. If the oil filter is too dirty the pressure in the filter will build until a bypass valve, built in the filter, opens and allows the oil to go to the engine without cleaning. From the filter, the oil makes its way through oil galleries in the cylinder block to the crankshaft main bearings. It then flows through the hollow crankshaft to lubricate the connecting rod bearings. Other oil galleries in the block bring the oil to the top of the engine where the camshaft bearings, lobes and the valve lifters are lubricated. On some engines, push rods on top of the lifters deliver oil to rocker arms and valve stems.

The oil returns to the oil pan via gravity. Drain passages in the head allow the oil that has collected to flow through. Some of the oil returning to the pan hits the rotating crankshaft and is splashed around lubricating the piston, piston rings and cylinder walls.

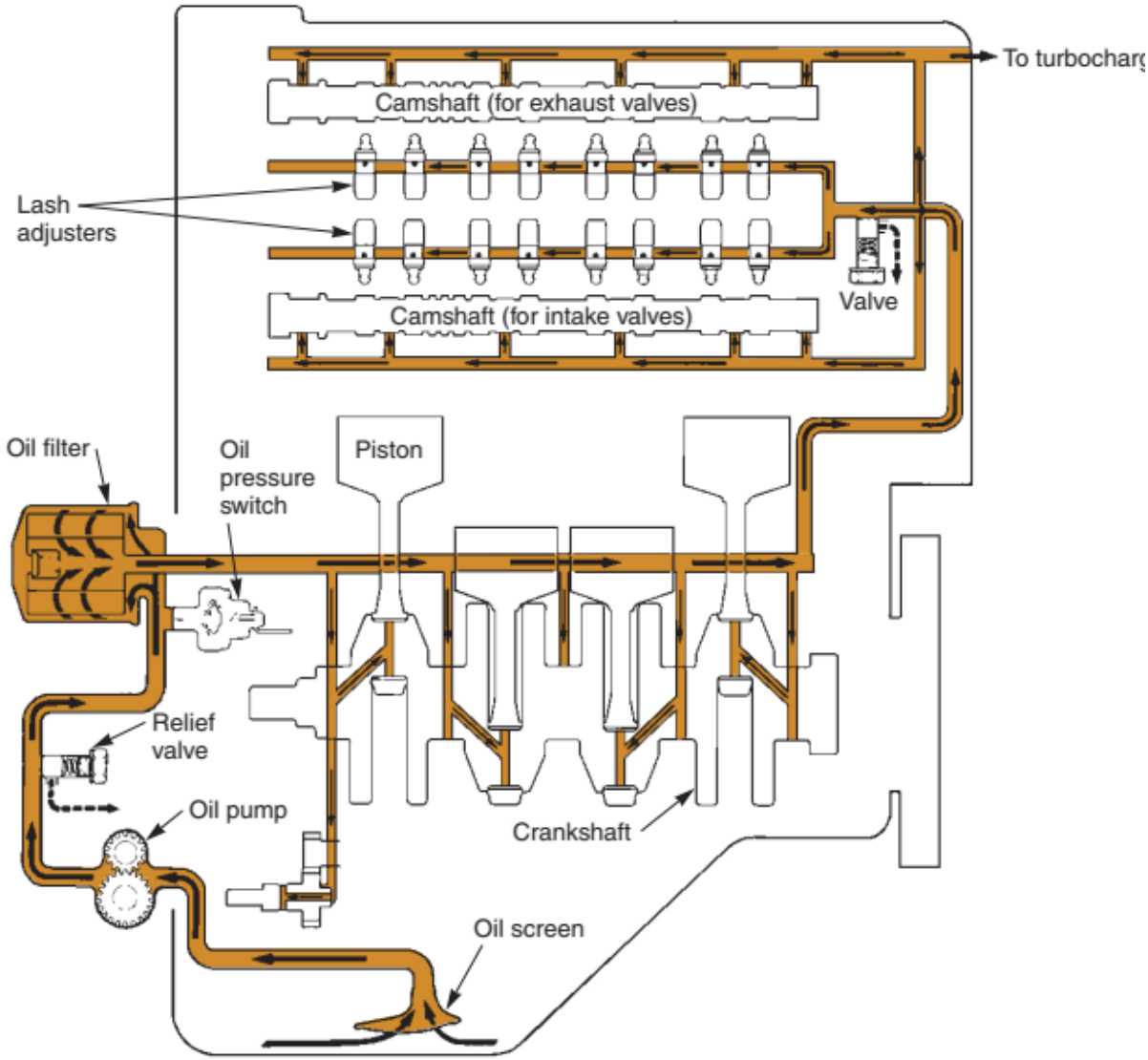

Figure 5.1- Lubrication system
(adapted from *Modern Automotive Technology* -7th Edition, by James E. Duffy, The Goodheart-Willcox Co., Inc. 2009)

5.3 What is engine oil?

Engine, or motor, oil is designed to lubricate the inner components of internal combustion engines, as well as to protect them against corrosion and keep them cool while in use.

It's made from two main elements: base stock and additives. The base stock commonly makes up 95 per cent of the solution and is either made from petroleum, synthetic chemicals or a mixture of the two. The base stock is responsible for lubricating an engine's moving parts and removing built-up heat. The additives,

meanwhile, account for roughly five per cent of the oil and it is these chemicals that are responsible for finely controlling oil viscosity and lubricity, as well as protecting engine parts against wear. For example, zinc dialkyldithiophosphate (ZDDP) is a frequently used additive for preventing wear, while magnesium sulphonates help the oil to break down impurities and engine sludge.

Engine oils are rated by their grade and viscosity. Any oil can either be single-grade, with a set viscosity level, or multi-grade in which the oil can act at two different viscosities depending on its temperature. The latter is most prevalent today, to cater for vehicles used all year round in various conditions. The flow-rate of both single- and multi-grade oils is measured on a viscosity grade scale, which includes 11 grades ranging from 0 to 60. Lower-ranked oils are thicker than higher-ranked ones, making them more suitable to hot environments, and vice versa.

5.4 Exercise

1. What forces oil to high-friction points?

2. Describe the operation principle of lubrication system.

3. What are the two main elements of engine oil?

UNIT 6- BRAKE SYSTEM

Objectives:

After studying this unit, you should be able to recognize the structure and function of brake system.

Introduction:

Unit 4 supplies students with knowledge of the structure and function of Brake system.

Main content:

6.1 Structure and function

The brake system produces friction to slow or stop the vehicle. When the driver presses the brake pedal, fluid pressure actuates a brake mechanism at each wheel. These mechanisms force friction material (brake pads or shoes) against metal discs or drums to slow wheel rotation. Figure 6.1 shows the fundamental parts of a brake system.

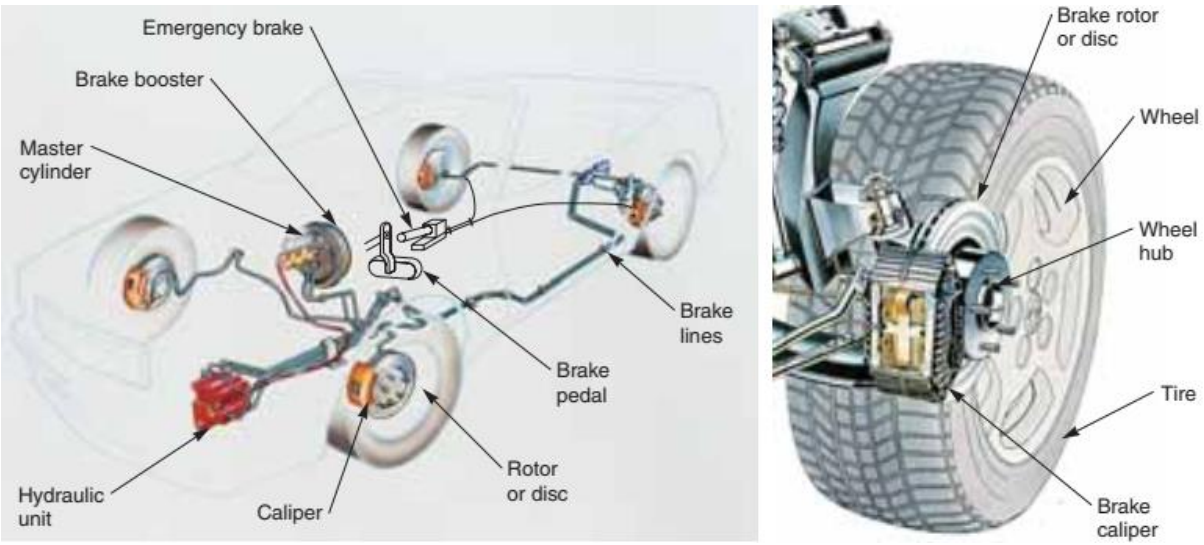

Figure 6.1- Brake system
(adapted from *Modern Automotive Technology* -7th Edition, by James E. Duffy, The Goodheart-Willcox Co., Inc. 2009)

6.2 Operation principle of brake system

When the brake pedal is pressed, pressure is placed on a confined fluid. The fluid pressure transfers through the system to operate the brakes. An emergency brake is a mechanical system that applies the rear wheel brakes. (Cadillac, Nissan)

Most modern cars have brakes on all four wheels, operated by a hydraulic system. The brakes may be disc type or drum type.

The front brakes play a greater part in stopping the car than the rear ones, because braking throws the car weight forward on to the front wheels.

Many cars therefore have disc brakes, which are generally more efficient, at the front and drum brakes at the rear.

All-disc braking systems are used on some expensive or high-performance cars, and all-drum systems on some older or smaller cars.

A **disc brake** has a disc that turns with the wheel. The disc is straddled by a caliper, in which there are small hydraulic pistons worked by pressure from the master cylinder.

The pistons press on friction pads that clamp against the disc from each side to slow or stop it. The pads are shaped to cover a broad sector of the disc.

There may be more than a single pair of pistons, especially in dual-circuit brakes.

The pistons move only a tiny distance to apply the brakes, and the pads barely clear the disc when the brakes are released. They have no return springs.

Rubber sealing rings round the pistons are designed to let the pistons slip forward gradually as the pads wear down, so that the tiny gap remains constant and the brakes do not need adjustment.

Many later cars have wear sensors leads embedded in the pads. When the pads are nearly worn out, the leads are exposed and short-circuited by the metal disc, illuminating a warning light on the instrument panel.

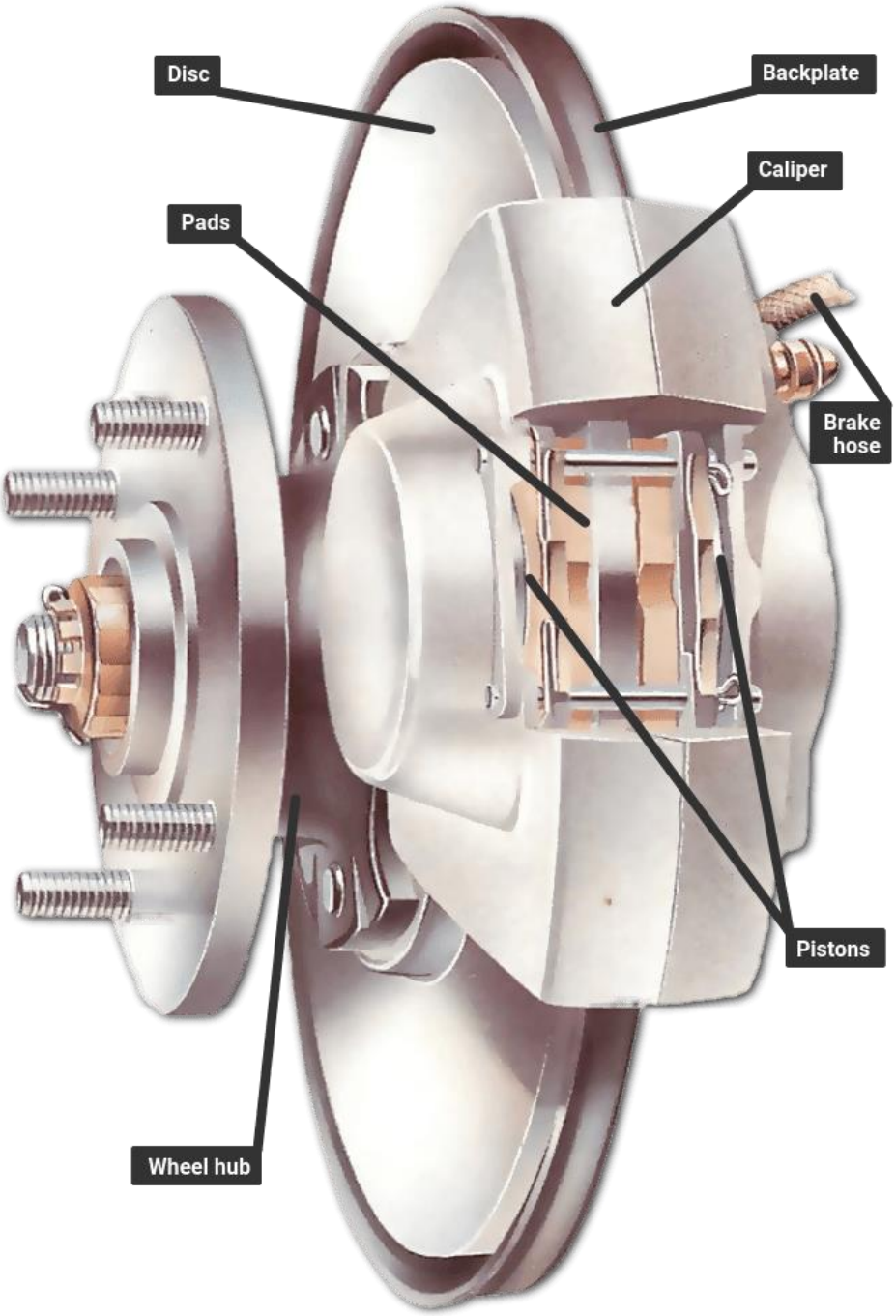

Figure 6.2.1- The basic type of disc brake
(images.app.goo.gl/vFWBzitrvE4BhNMU8)

A **drum brake** has a hollow drum that turns with the wheel. Its open back is covered by a stationary backplate on which there are two curved shoes carrying friction linings.

The shoes are forced outwards by hydraulic pressure moving pistons in the brake's

wheel cylinders, so pressing the linings against the inside of the drum to slow or stop it.

Each brake shoe has a pivot at one end and a piston at the other. A leading shoe has the piston at the leading edge relative to the direction in which the drum turns.

The rotation of the drum tends to pull the leading shoe firmly against it when it makes contact, improving the braking effect.

Some drums have twin leading shoes, each with its own hydraulic cylinder; others have one leading and one trailing shoe - with the pivot at the front. This design allows the two shoes to be forced apart from each other by a single cylinder with a piston in each end. It is simpler but less powerful than the two-leading-shoe system, and is usually restricted to rear brakes. In either type, return springs pull the shoes back a short way when the brakes are released.

Shoe travel is kept as short as possible by an adjuster. Older systems have manual adjusters that need to be turned from time to time as the friction linings wear. Later brakes have automatic adjustment by means of a ratchet.

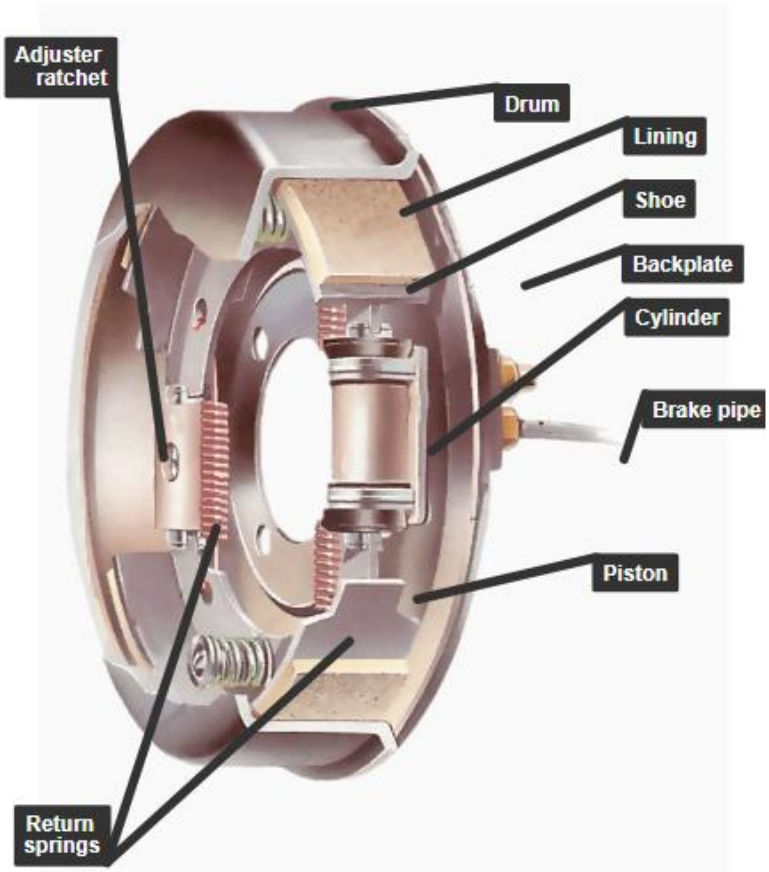

Figure 6.2.2- Drum brake
(images.app.goo.gl/vFWBzitrvE4BhNMU8)

Drum brakes may fade if they are applied repeatedly within a short time - they heat up and lose their efficiency until they cool down again. Discs, with their more open construction, are much less prone to fading.

6.3 Exercise

1. Identify and write down missing fundamental parts of a brake system.

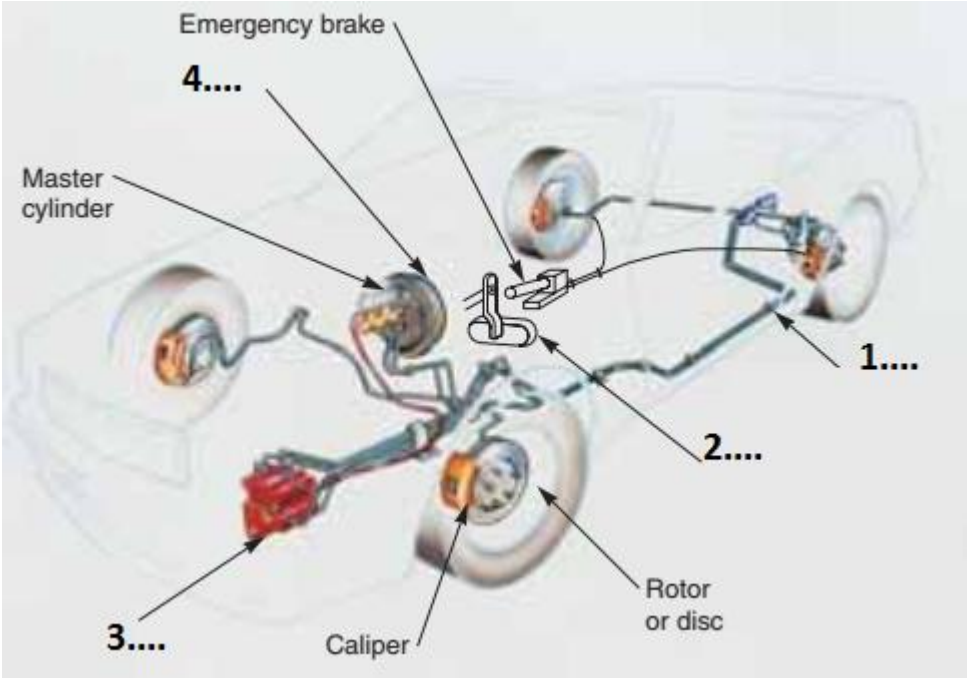

(adapted from *Modern Automotive Technology* -7th Edition, by James E. Duffy, The Goodheart-Willcox Co., Inc. 2009)

2. Describe the operation principle of disc brake and drum brake.

UNIT 7- POWERTRAIN SYSTEM

Objectives:

After studying this unit, you should be able to recognize the structure and function of Powertrain system.

Introduction:

Unit 9 supplies students with knowledge of the structure and function of Powertrain system such as: clutch, transmission, propeller shaft and differential.

Main content:

7.1. Clutch

7.1.1 Structure and function

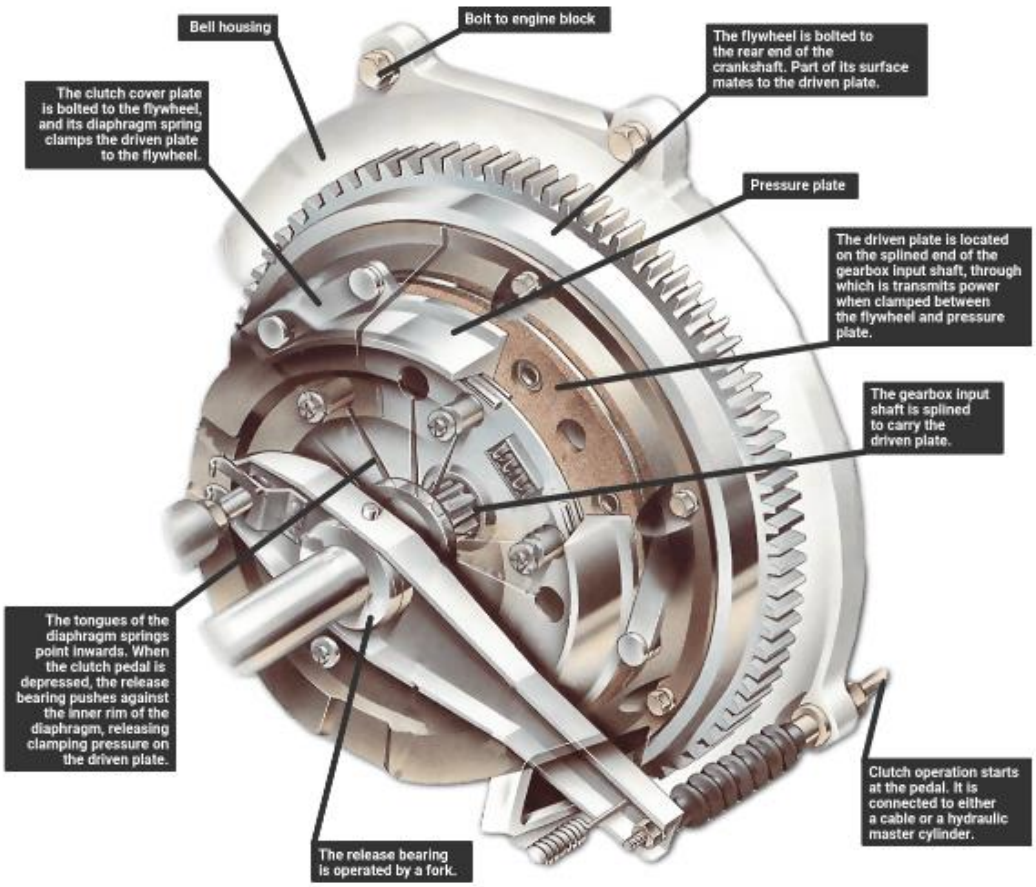

Figure 7.1- Clutch system
(images.app.goo.gl/YjTyurs6ETmZRPfNA)

7.1.2 Operation principle of clutch

The clutch allows the driver to engage or disengage the engine and manual transmission or transaxle. When the clutch pedal is in the released position, the clutch locks the engine flywheel and the transmission input shaft together. This causes engine power to rotate the transmission gears and other parts of the drive train to propel the vehicle. When the driver presses the clutch pedal, the clutch disengages power flow and the engine no longer turns the transmission input shaft and gears.

7.2 Tranmission

7.2.1 Structure and function

The transmission uses various gear combinations, or ratios, to multiply engine speed and torque to accommodate driving conditions. Low gear ratios allow the vehicle to accelerate quickly. High gear ratios permit lower engine speed, providing good gas mileage.

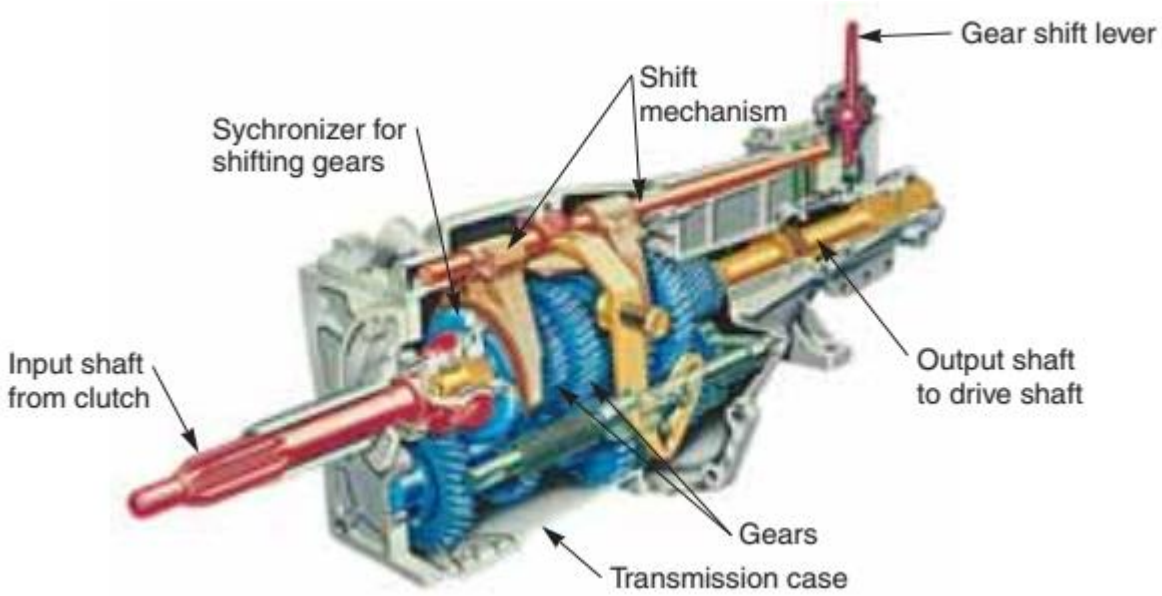

Figure 7.2.1- Transmission
(adapted from *Modern Automotive Technology* -7th Edition, by James E. Duffy, The Goodheart-Willcox Co., Inc. 2009)

7.2.2 Operation principle of brake system

A manual transmission lets the driver change gear ratios to better accommodate driving conditions, Figure 7.2.1. An automatic transmission, on the other hand, does not have to be shifted by the driver. It uses an internal hydraulic system and, in most cases, electronic controls to shift gears. The input shaft of an automatic transmission is connected to the engine crankshaft through a torque converter (fluid coupling) instead

of a clutch. The elementary parts of an automatic transmission are pictured in Figure 7.2.2.

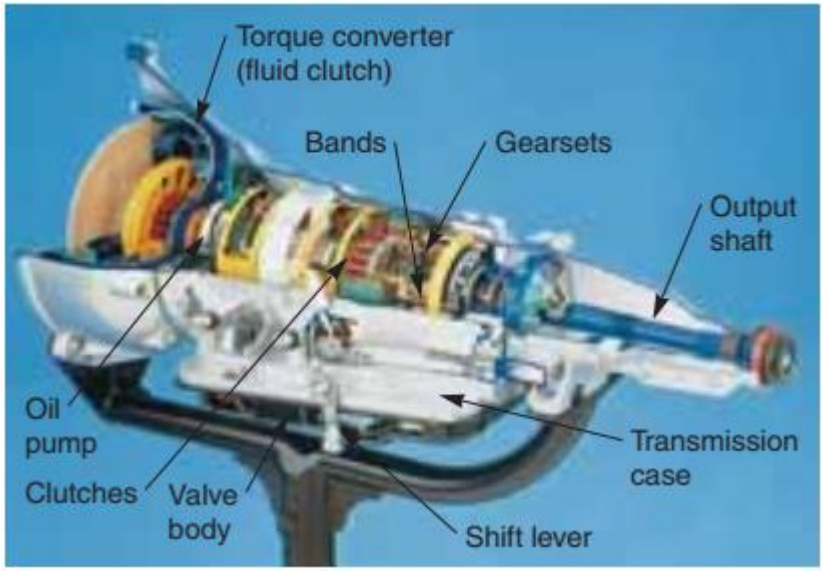

7.2.2- Operation principle of brake system
(adapted from *Modern Automotive Technology* -7th Edition, by James E. Duffy, The Goodheart-Willcox Co., Inc. 2009)

7.2.3 What is tranmission oil?

Transmission oil or transmission fluid is used to lubricate the components of a car's transmission for optimum performance. In vehicles with automatic transmissions, this fluid also acts as a coolant. There are several types of auto transmission fluids, and the type used in individual cars and trucks depends on the type of transmission inside. Automatic transmissions use regular automatic transmission fluid, as the name suggests. Manual transmission fluid can vary, however, using either plain motor oil, a transmission oil known as heavyweight hypoid gear oil, or automatic transmission fluid. The type of transmission fluid to use in vehicles with standard transmissions can usually be found in the maintenance section of the owner's manual.

While the primary function of auto transmission fluid is to lubricate the various parts of the transmission, it can serve other functions as well:

- Clean and protect metal surfaces from wear
- Condition gaskets
- Enhance cooling function and reduce high operating temperatures
- Increase rotational speed and temperature range

7.3 Propeller shaft

Structure and function

The drive shaft, or propeller shaft, transfers power from the transmission to the rear axle assembly. Look at Figure 7.3.

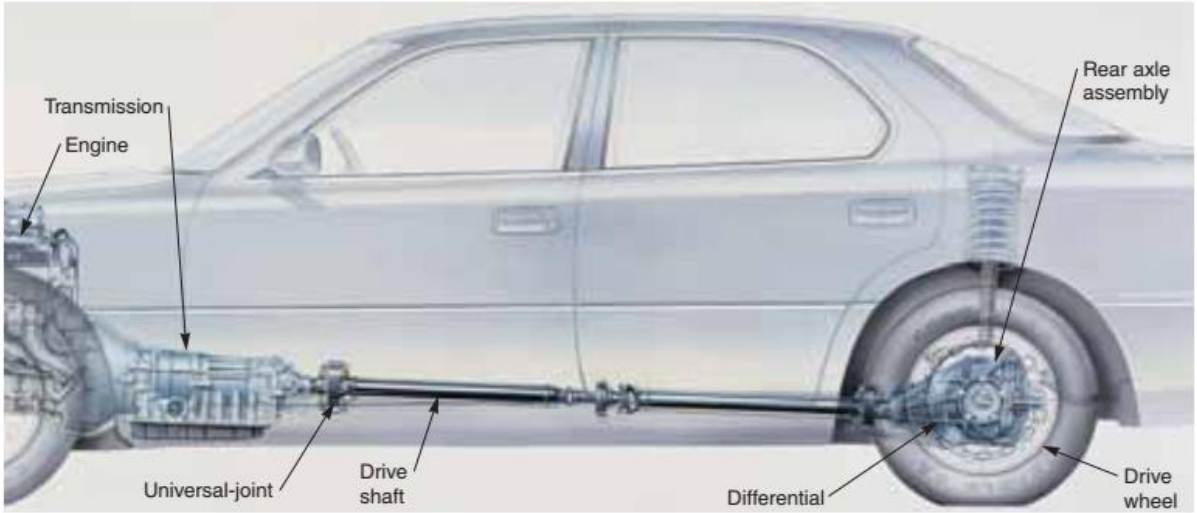

Figure 7.3- Propeller shaft
(adapted from *Modern Automotive Technology* -7th Edition, by James E. Duffy, The Goodheart-Willcox Co., Inc. 2009)

7.4. Differential

7.4.1 Structure and function

The rear axle assembly contains a differential and two axles.

The differential is a set of gears and shafts that transmits power from the drive shaft to the axles. The axles are steel shafts that connect the differential and drive wheels, Figure 7.3.

7.4.2 Operation principle of differential

The transaxle consists of a transmission and a differential in a single housing. Although a few rear-wheeldrive vehicles are equipped with transaxles, they are most commonly used with front-wheel-drive vehicles, Figure 7.4.1. Both manual and automatic transaxles are available. The internal parts of a modern transaxle assembly are illustrated in Figure 7.4.2.

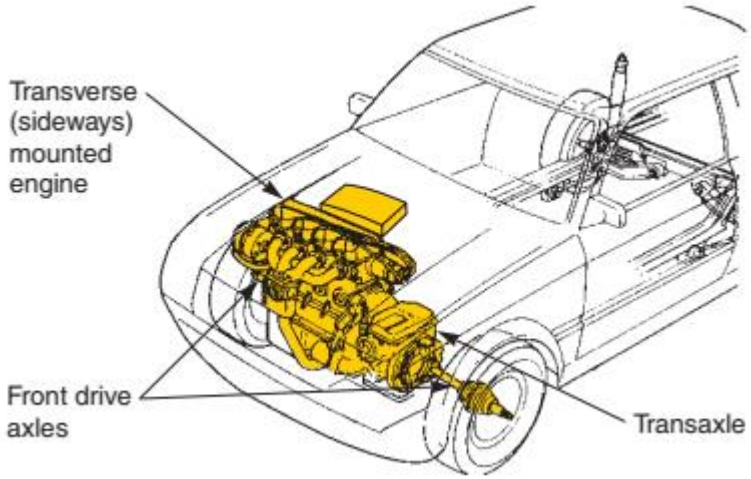

Figure 7.4.1- Front-wheel-drive vehicles do not have a drive shaft or a rear drive axle assembly. The complete drive train is in the front of the vehicle. (Ford)
(adapted from *Modern Automotive Technology* -7th Edition, by James E. Duffy, The Goodheart-Willcox Co., Inc. 2009)

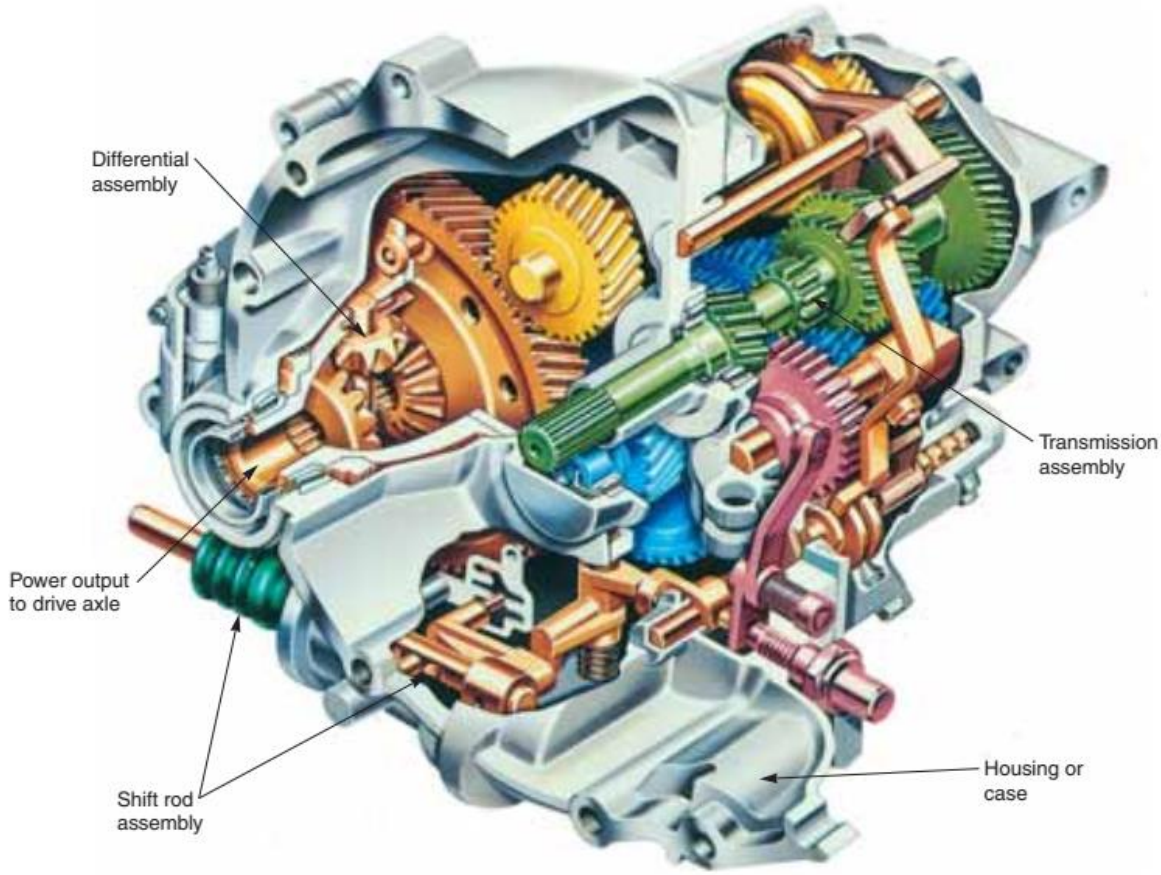

Figure 7.4.2- A transaxle contains a transmission and a differential in one housing. (Ford)
(adapted from *Modern Automotive Technology* -7th Edition, by James E. Duffy, The Goodheart-Willcox Co., Inc. 2009)

The front drive axles connect the transaxle differential to the hubs and wheels of the vehicle. These axles are equipped with constant-velocity joints, which allow the front wheels to be turned to the left or right and to move up and down.

7.4.3 What is differential oil?

Differential oil, sometimes referred to as gear oil, is found in the axle housing. It's thicker than engine oil and is designed to perform under high pressure (gears mashing together, hydraulic nature of clutch packs) rather than high temperatures like engine oil.

As you cruise down the road, the gear oil splashes about lubricating gears, bearings and clutch packs. The differential oil lubricates the ring and pinion gears that transfer power from the driveshaft to the wheel axles. If your car is fitted with a limited-slip differential, it also keeps all the moving parts in that assembly healthy. The purpose of the differential fluid is to cool and lubricate your differential. Without the oil your differential would overheat due to the metal-to-metal contact and burn itself out.

7.5 Exercise

1. What is the difference between a manual transmission and an automatic transmission?

2. A one-piece drive shaft rotates the drive wheels on most front-wheel drive cars. True or False?

3. A rear axle assembly contains two _____ and a(n) _____.

4. Explain the term "transaxle."

UNIT 8- STEERING SYSTEM

Objectives:

After studying this unit, you should be able to recognize the structure and function of cooling system.

Introduction:

Unit 8 supplies students with knowledge of the structure and function of Steering system.

Main content:

8.1 Structure and function

The car steering system or just steering system is the most important part in automobile vehicle steering control, respond so well to the driver while driving. Steering control makes you feel safe while driving.

Car steering system in the automobile, it is the process of running the vehicle in the desired direction by turning, usually the front wheels. For effective control of the vehicle throughout its speed range with safety, proper steering is necessary.

The system allows a driver to use only light forces to steer a heavy car.

Steering is also possible by the turning of the rear wheels, which is used generally in low-speed slow floor vehicles, for lifting and transporting the heavy parts to a short distance for example forklift.

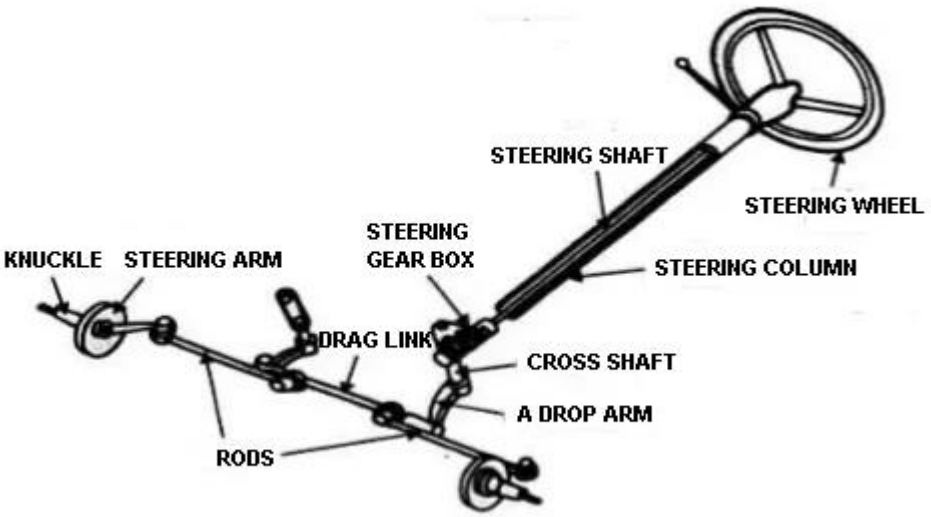

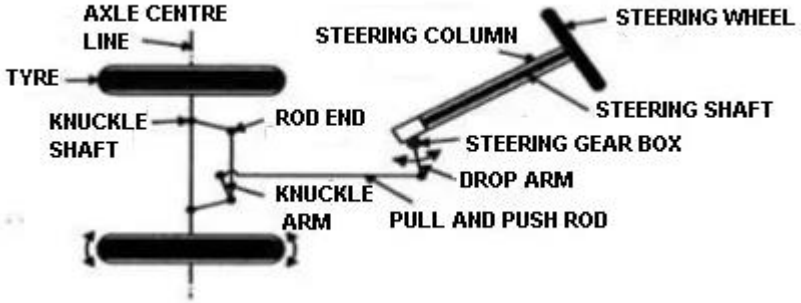

Figure 8.1- steering system
(images.app.goo.gl/K135aSkeP4V4Kd8p9)

8.2 Operation principle of steering system

Steering system will convert the rotary motion of the steering wheel into the angular turn of the front wheels.

- Steering wheel rotates the steering column.
- The steering gearbox is fitted to the end of this column. Therefore, when the wheel is rotated, the cross shaft in the gearbox oscillates.
- The cross shaft is connected to the drop arm. This arm is linked by means of a drag link to the steering arms.
- Steering arms on both wheels are connected by the tie rods to the drag link.
- When the steering wheel is operated the knuckle moves to and fro, moving the steering knuckle are connected to each other.
- One end of the drag link is connected to the tie rod. The other end is connected to the end of the drop arm.

8.3 What is steering system fluid?

Steering system fluid is a hydraulic fluid used in the steering system of a vehicle. The fluid runs through the power steering pump and hoses, providing an assist to the steering system and making the vehicle easier to control. In addition to providing power to the system, the fluid works as a lubricant and a sealant to prevent corrosion and leaks in the system.

Although some fluids are water based, most are made from mineral oil because it provides better lubrication and can withstand the high temperatures and heat that the engine in a running vehicle creates. Other oils, such as rapeseed, canola, and silicone oils, are sometimes used for hydraulic fluids.

8.4 Exercise

Complete the diagram with correct names of the missing parts.

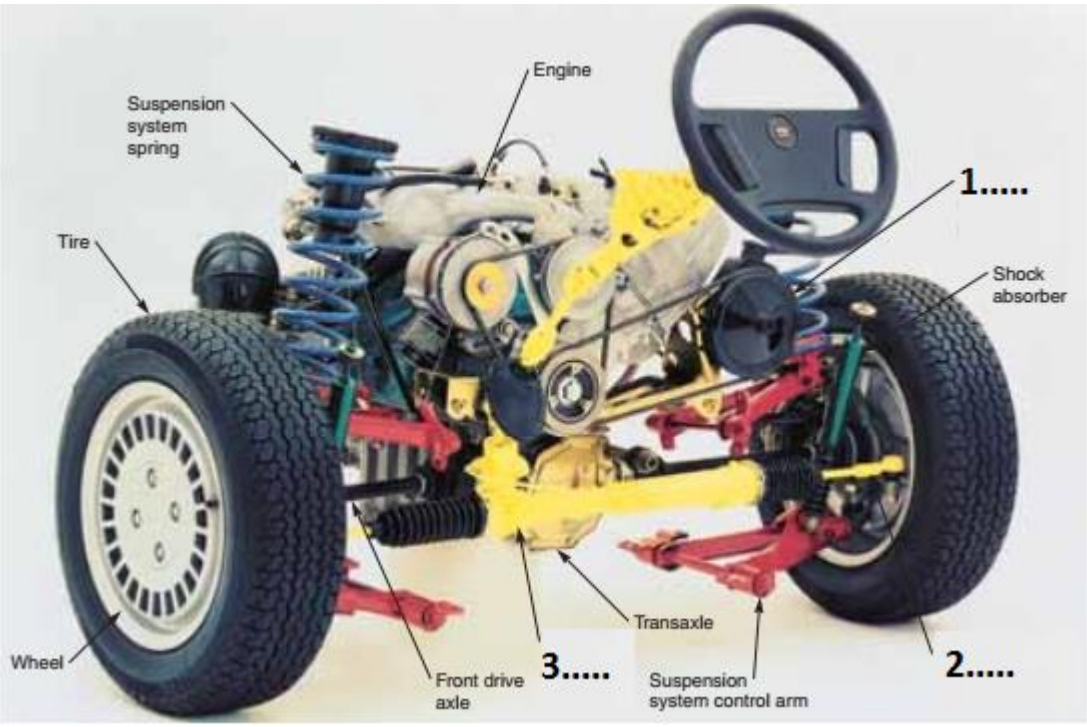

(adapted from *Modern Automotive Technology* -7th Edition, by James E. Duffy, The Goodheart-Willcox Co., Inc. 2009)

REFERENCES

[1] Lê Thảo Loan (2006), ***Tiếng Anh công nghệ ô tô và chế tạo máy***, NXB Thanh Niên

[2] Hornby & Albert Sydney (2014), ***Từ điển song ngữ Anh - Việt: Oxford advanced learner's dictionary with Vietnamese translation***, NXB Trẻ.

[3] James E. Duffy (2009), ***Modern Automotive Technology*** -7th Edition, The Goodheart-Willcox Co., Inc.

[4] Marie Kavanagh (2007), ***English for the Automobile Industry***, Oxford University.

[5] Raymond Murphy (2015), ***Essential Grammar in use: A self-study reference and practice book for elementary learners of English***, Cambridge University Press.